COVAL

vacuum managers

Customized
Vacuum Grippers

CVG

www.coval.com

US7

CVG

COVAL CVG Series: Many

A Single Solution

With the CVG series, COVAL provides a comprehensive solution to vacuum gripping: flexible, simple and economic.

The handling of parts with different sizes, shapes and weights is no longer a complex, expensive or difficult task.

With a single CVG module, easily integrated into the process, the user can ensure random gripping of different parts both straightforward and safe.

Advantages of the CVG Series

The CVG series are equipped with standardized, removable interfaces. These allow for a customized solution to fit the applications and requirements of integrators and users:

- Compact
- Lightweight
- Integrated functions
- Modularity
- Performance
- Ease of use
- Universal mounting
- …

Solutions According to the Applications

The CVG series vacuum grippers offer a single solution for the handling of products in different industrial sectors. The adaptability and flexibility of the CVG series lends itself to many various robotic applications.

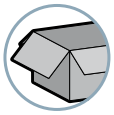

PACKAGING

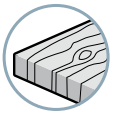

WOOD

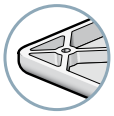

PLASTICS

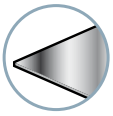

METAL

GLASS

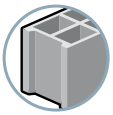

CONCRETE/STONE

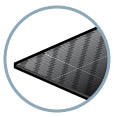

CARBON

...

The adaptability and the flexibility of COVAL vacuum grippers CVG series respond to the multiple robotic applications.

COVAL is an ISO 9001: V2015 certified company *which offers innovative solutions integrating reliable and optimized components with intelligent functionalities. The focus is to provide the most personalized and economic solution to a given application while assuring a significant improvement in the productivity and the safety of the vacuum users around the world.*

Since more than 30 years, COVAL develops on request customized solutions for automated applications in the sector of packaging, food industry, plastics and automotive industry.

With a wealth of this long experience COVAL is today able to offer these CVG series vacuum grippers in their standard version.

LLOYD'S REGISTER • LRQA
ISO 9001
certified quality management system

Applications... **One** Solution

A Complete System

- **1** light and robust aluminium profile
- **1** universal mounting system
- **3** standard lengths (424, 624, 824 mm)
- **3** generator sizes
- **2** interface technologies (foam or suction cups)
- **3** gripping point distributions (mini, medium or maxi)
- **2** flow rate control technologies (check valves or flow control nozzles)
- **2** control versions (vacuum and blow-off)
- **2** solutions for vacuum monitoring
- **+ The Vacuum Manager experience of COVAL**

= your CVG solution

Foam plate "mini" type

Gripping points ø 12mm

Foam plate "maxi" type

Gripping points ø 16mm

Suction cup plate "mini" type

2.5 bellows type suction cups ø 14mm

Suction cup plate "medium" type

1.5 bellows type suction cups ø 25mm

Suction cup plate "maxi" type

1.5 bellows type suction cups ø 33mm

COVAL
vacuum managers

COVAL CVG Series:

Gripping Interface Technology

The CVG range presents 2 technologies in gripper interface which will meet the requirements of any application.

"FOAM" INTERFACE
- Handling of rigid products.
- Gripping on textured and uneven surfaces.
- Flow resistors or check valves.
- 2 standard hole diameters (ø 12 and 16 mm).
- 2 standard hole patterns.
- 3 standard lengths (424, 624, and 824 mm).

"SUCTION CUP" INTERFACE
- Handling of flexible or deformable products
- Wide range of options.
- Flow resistor options
- 3 types of standard suction cups (ø 14, ø 25, ø 33 mm).
- 3 standard cup patterns
- 3 standard lengths (424, 624, and 824 mm)....or custom length.

__COVAL__, in order to provide a flexible handling solution, offers 2 complementary interface technologies for use with the __CVG__ series: vacuum grippers with foam and suction cup grippers.

A wide range of options adaptable to all applications

Gripping Interface Options

In order to optimize the performance of the CVG series for each and every application, various options in standard hole/cup patterns are provided.

"MINI" TYPE PLATE
- Reduced hole spacing, allowing small, flexible pieces to be gripped.
- The multitude of gripping points guarantees a strong grip, even with random positioning of products.
- Dimensions, refer to page 9.

"MEDIUM" TYPE PLATE
- Intermediary gripping point distribution between the mini and maxi interfaces.
- Ideal for handling dense loads with reduced gripping surface.
- Dimensions, refer to page 9.

"MAXI" TYPE PLATE
- Large gripping point surfaces, allowing heavy loads to be gripped.
- Ideal for products with rigid gripping surfaces.
- Dimensions, refer to page 9.

Vacuum Gripping Force

Part number	Total length of the vacuum gripper (mm)	Force at 85% vacuum (lbf)*	Force at 45% vacuum (lbf)*
CVG 424 _ _ _ _ _	424	247.3	134.9
CVG 624 _ _ _ _ _	624	370.9	202.3
CVG 824 _ _ _ _ _	824	494.6	269.8

**Indicative force for a vacuum gripper covered 100% by the load, without safety factor, on rigid and airtight surface.*

Integrated Technologies

Vacuum Flow Management

FLOW CONTROL NOZZLES

This simple and energy saving technology, available for both gripping interfaces, allows for precise calibration of any vacuum leakage.
The exact size can be easily adapted by COVAL to match application requirements and ensures the required vacuum level and flow for part gripping.

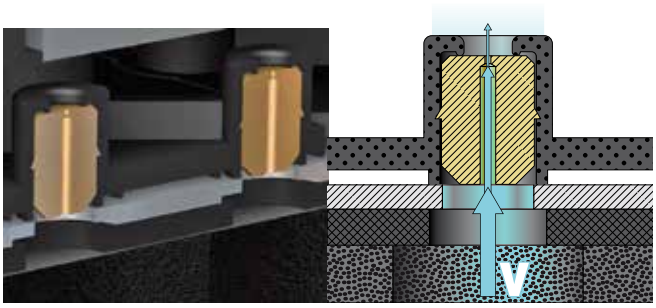

CHECK VALVES

This COVAL patented technology, only available on the "foam" interface, ensures an instant grip due to a high suction flow rate. The valves permit vacuum flow only when the part is present and close automatically if the part is missing or does not fully cover the CVG gripping surface.
This system guarantees optimal gripping and is therefore ideal for applications with short and dynamic cycles.

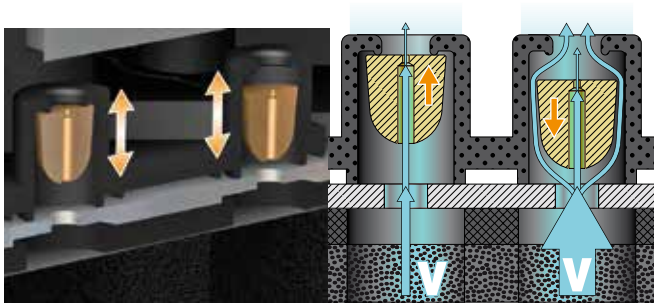

Vacuum Generation

INTEGRATED VACUUM GENERATORS, CMSE SERIES

Integration of a multi-stage vacuum generator on the CVG gripper provides a comprehensive and compact gripping solution, as well as easy integration in your process.
Options: integration of a vacuum and/or blow-off solenoid control valve with M12 connector and a vacuum level display (electronic vacuum switch display or vacuum gauge).

Advantages :
- A comprehensive solution.
- 3 standard sizes.
- Option: vacuum and/or blow-off control valve.
- Option: visual display of vacuum level.

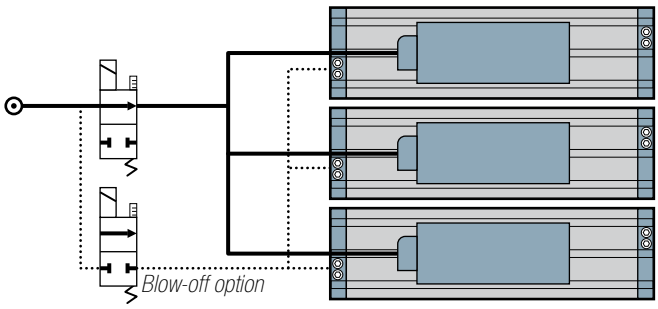

EXTERNAL VACUUM GENERATORS

The CVG vacuum grippers may also be used with an independent vacuum generator. According to the application, an external generator may be necessary (a blower, an electrical vacuum pump or a pneumatic generator, see page 9/2). The CVG series vacuum gripper G0 version is fitted with a G3/4"-F flange allowing the simple connection of the vacuum source.
Option: integration of a vacuum level display (vacuum switch or vacuum gauge).

Advantages :
- Reduced weight.
- Adaptation to user enviroment.
- Option: visual display of vacuum level.

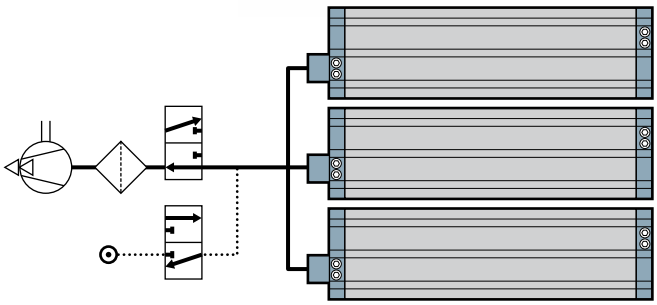

TECHNICAL DATA OF THE CMSE SERIES EXTERNAL VACUUM GENERATORS

External vacuum generator	Model	Con-sumption (SCFM)	Flow-rate (SCFM)	Max. vacuum (%)	Sound level (dBA)
CMSE 50	CVG _____ E1	6.71	31.78	85	65
CMSE 100	CVG _____ E2	13.42	63.57	85	65
2xCMSE 100	CVG _____ E3	26.84	127.13	85	65

CONFIGURATION GENERATORS/VACUUM GRIPPER LENGTH

Vacuum generator	CVG 424 _____		CVG 624 _____		CVG 824 _____	
	Possible config.	(Kg)	Possible config.	(Kg)	Possible config.	(Kg)
G0	■	2.1	■	2.7	■	3.5
E1	■	3.2				
E2	■	3.3	■	4.6	■	5.0
E3			■	5.4	■	5.75

COVAL
vacuum managers

Vacuum Generator Control

When necessary, the CVG vacuum grippers can be equipped with a vacuum control valve and/or blowoff to optimize product release.This also enables the cleaning of the vacuum network, flow control nozzles and check valves. A vacuum switch or analog gauge is available as an option for those requiring a visual display of the vacuum level in the system.

■ LAYOUT

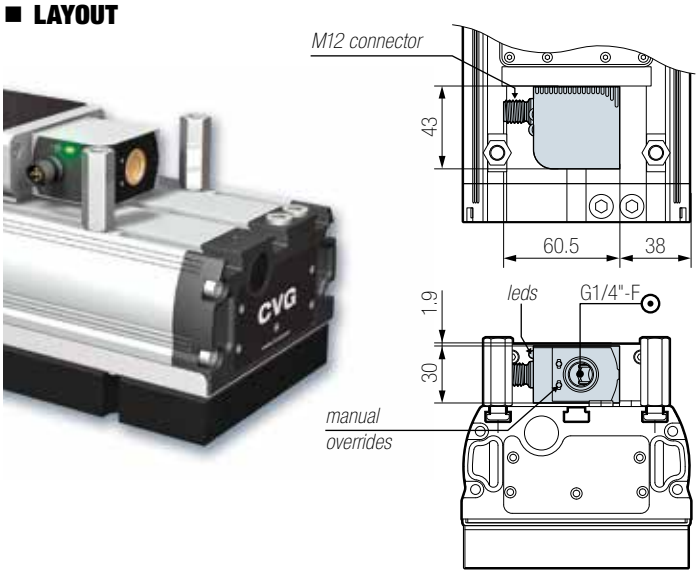

■ Option S - NC vacuum control, with controlled blow-off:

CVG___ _ _F E_**S**V_

- 2 control signals.
- NC vacuum control valve.
- Blow-off controlled by external signal (NC control valve).

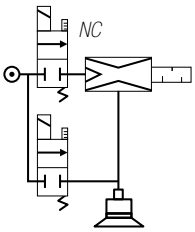

■ Option V - NO vacuum control, with controlled blow-off:

CVG___ _ _F E_**V**V_

- 2 control signals.
- NO vacuum control valve.
- Blow-off controlled by external signal (NC control valve)

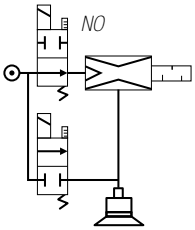

■ ELECTRICAL CONTROL

- Control voltage: 24 VDC (regulated) +/- 10 %.
- Current draw: 30 mA (0,7 W) vacuum or blow-off.
- Maximum usage frequency: 2Hz.
- Number of operations: 10 million cycles.

■ ELECTRICAL M12 CONNECTIONS

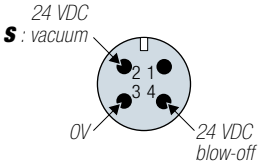

CVG___ _ _F E_**S**V_

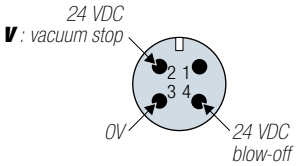

CVG___ _ _F E_**V**V_

Vacuum Level Display

■ CVG_____VA Electronic vacuum switch with digital display

- Adjustable range: 0.00 ~ -1.00 bar
- Hysteresis: adjustable
- Maximum overpressure: 3 bar.
- Repeatability: +/-1% of the range.
- Output signals: 2 x NO/NC.
- Switching capacity: 125mA transistor PNP.
- Threshold state display: 2 x LEDs.
- Display unit: bar.
- Electrical connection: M8 (4 pins).
- Power supply: 18 to 24 VDC (regulated).
- Current draw: < 60 mA.
- Protection: IP 40.
- Frame material: PA6.6 20%GF

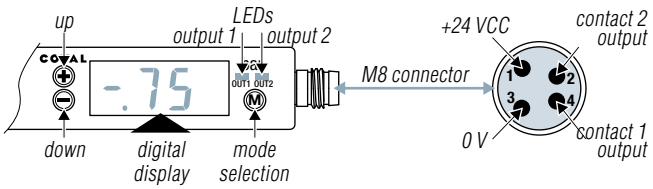

Mounting of the **VA** vacuum switch option for a gripper without vacuum generator (**G0**), or having a minimum space of 125mm depending on the length of the gripper and the choice of the vacuum generator.

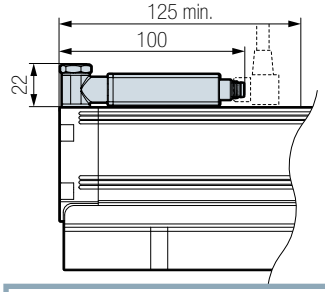

Mounting of the **VA** vacuum switch option for a gripper with vacuum generator (version **E1**, **E2** or **E3**) and not having sufficient space for the horizontal mounting.

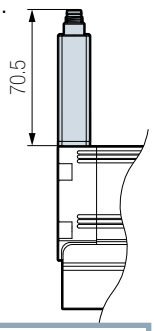

■ CVG_____VF vacuum gauge

- Vacuum gauge with needle.
- Damping: by silicone movement (patented).
- Measuring: Bourdon tube in CuSn.
- Precision: cl. 2,5 (+/- 2.5% of max. scale value).
- Frame: black ABS

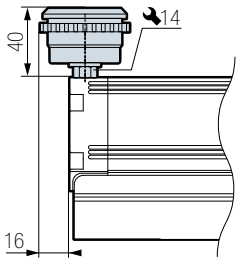

CVG Series: Selection for the Application

CVG SERIES WITH FOAM PLATE: ONE COMPLETE PART NUMBER

CVG	424	V		S		F	E	2		S		V	A

GRIPPER LENGTH	
424 mm	424
624 mm	624
824 mm	824

TECHNOLOGY	
V	Check valves
H	Flow resistors

GRIPPING SURFACES DIA.	
S	mini
B	maxi

Integrated filter on the CVG series vacuum gripper with foam plate

*VACUUM GENERATOR	
G0	Without vacuum generator
E1	1 x CMSE 50
E2	1 x CMSE 100
E3	2 x CMSE 100

** see page 5 table of the possible configurations*

*VAC. GEN. CONTROL	
N	Without control
S	NC vac. control & NC blow-off control
V	NO vac. control & NC blow-off control

** only for E1 and E2*

MONITORING	
V0	Without display
VA	Electronic vacuum switch with digital display
VF	Vacuum gauge

EXAMPLE :

CVG 424 V S F E2 S VA (CVG vacuum gripper, length 424mm, check valve technology, foam plate "mini" type with filter, 1 integrated vacuum generator CMSE 100, NC vacuum and blow-off control, electronic vacuum switch with digital display.)

CVG SERIES WITH SUCTION CUP PLATE: 2 INDIVIDUAL PART NUMBERS

1- PART NUMBER OF THE FRAME

CVG	424		X		E	2		S		V	0

GRIPPER LENGTH	
424	424 mm
624	624 mm
824	824 mm
...	...

*VACUUM GENERATOR	
G0	Without vacuum generator
E1	1 x CMSE 50
E2	1 x CMSE 100
E3	2 x CMSE 100

** see page 5 table of the possible configurations.*
E1/E2 : mini. length of the gripper 280 mm.
E3 : mini. length of the gripper 545 mm.

*VAC. GENERATOR CONTROL	
N	Without control
S	NC vacuum control & NC blow-off control
V	NO vacuum control & NC blow-off control

** only for E1 and E2*

MONITORING	
V0	Without display
VA	Electronic vacuum switch with digital display
VF	Vacuum gauge

2- PART NUMBER OF THE SUCTION CUP PLATE

CP	424	VSP14BF

LENGTH OF THE VACUUM GRIPPER	
424 mm	424
624 mm	624
824 mm	824
...	...

SUCTION CUP AND FLOW RESISTOR MODELS ACCORDING TO THE PLATE		
VSP14BF	"Mini" type plate	2.5 bellows suction cups ø 14 mm in silicone 30 Shore with flow resistors ø 0.7 mm
VSA25JI	"Medium" type plate	1.5 bellows suction cups ø 25 mm in natural rubber with flow resistors ø 0.9 mm
VSA33JK	"Maxi" type plate	1.5 bellows suction cups ø 33 mm in natural rubber with flow resistors ø 1.1 mm
...		Specific version ➔

EXAMPLE:

CVG 424 X E2 S VA (CVG vacuum gripper length 424 mm without plate, with 1 integrated vacuum generator CMSE 100, NC vacuum and blow-off control, electronic vacuum switch with digital display).

+ CP 424 VSP14BF (Suction cup plate for vacuum gripper length 424 mm, equipped with with VSP14SI3 cups Ø14mm and flow resistors Ø 0.7mm.)

SPECIAL VERSIONS

Sometimes your project may require a version of our CVG that is not listed as standard.

COVAL is able to give you a tailored solution for your application by integrating specific functions or offering you a custom gripper (custom length or selection of suction cup).

COVAL
vacuum managers

Dimensions and Mounting

DIMENSIONS AND CONNECTIONS

	CVG424	CVG624	CVG824
A	424	624	824
B	384	584	784

in mm, any versions

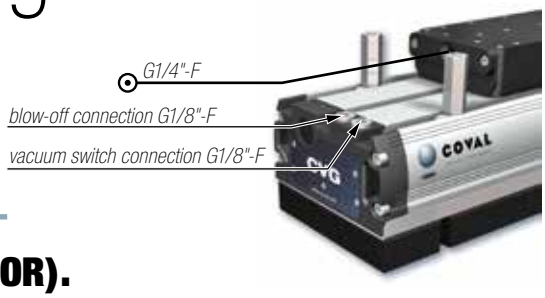

GO VERSIONS (WITH INDEPENDANT VACUUM GENERATOR).

The COVAL vacuum grippers in the CVG series are particularly easy to install and operate. CVGs may be mounted universally on all types of automated systems and robots by 4 sliding nuts located in the groove of the aluminium profile (mounted with 4 M8 screws). These nuts are fitted with a spring plate to maintain their position while unscrewing.

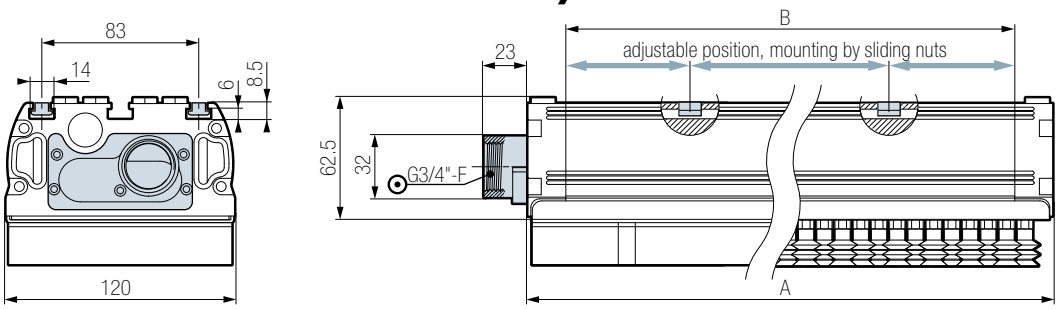

E1 OR E2 VERSIONS (1 INTEGRATED VACUUM GENERATOR, CMSE SERIES).

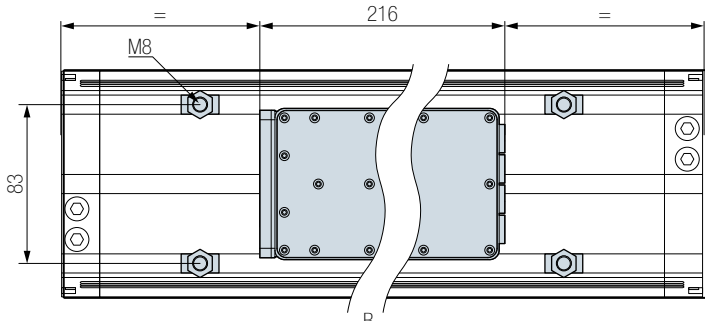

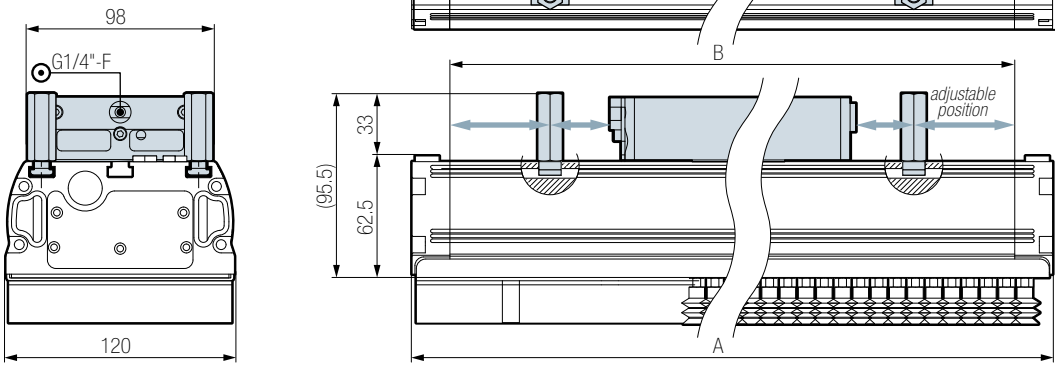

The CVG grippers in versions E1 and E2 are mounted universally on all types of automated systems and robots via 4 x M8 spacers in the groove of the aluminum profile (mounting by 4 x M8 screws).

In CVG series grippers with version E3, there are 6 x M8 spacers which can be adjusted as required.

E3 VERSIONS (2 INTEGRATED VACUUM GENERATORS, CMSE SERIES).

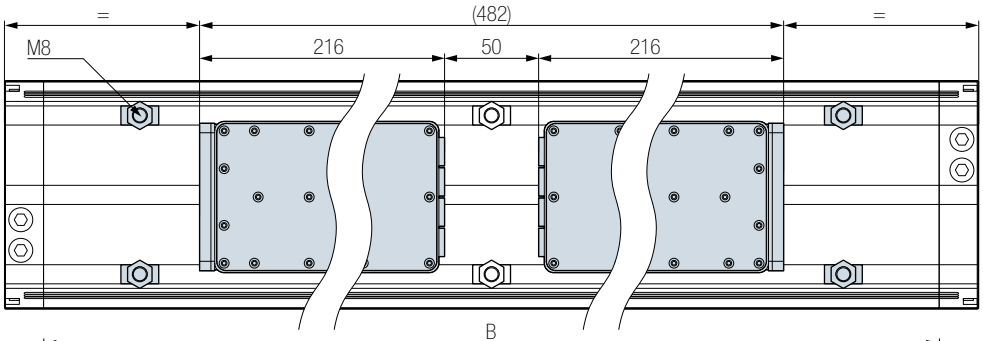

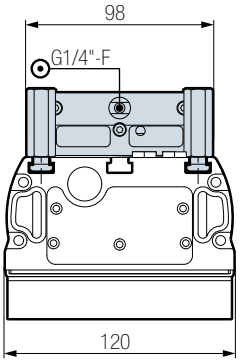

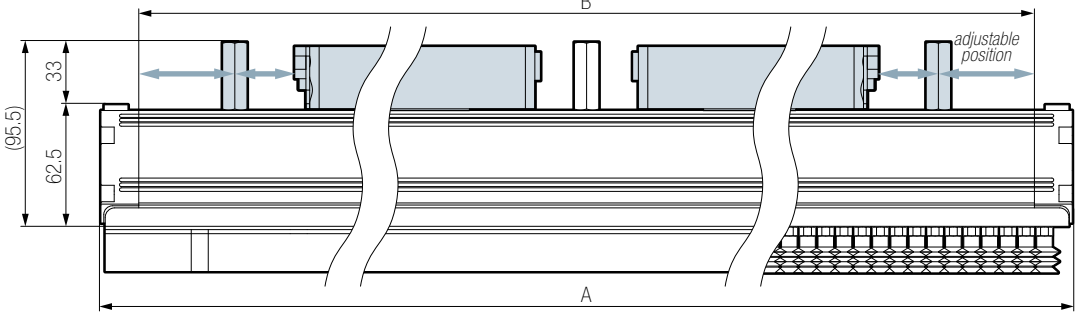

Gripping Interfaces and Technical Data

CVG SERIES WITH FOAM PLATE

"Mini" type foam plate

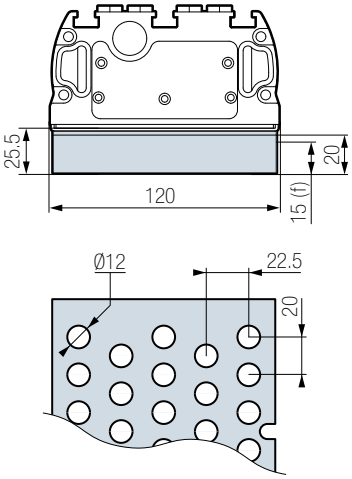

"Maxi" type foam plate

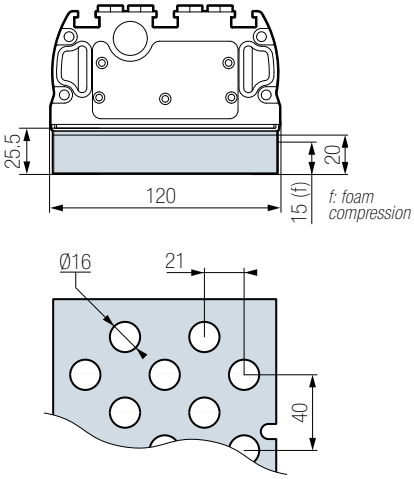

NUMBER OF GRIPPING POINTS PER PLATE

	CVG 424	CVG 624	CVG 824
"mini" type plate hole diameter Ø 12 mm	98	148	198
"maxi" type plate hole diameter Ø 16mm	50	75	100

CVG SERIES WITH SUCTION CUP PLATE

"Mini" type suction cup plate

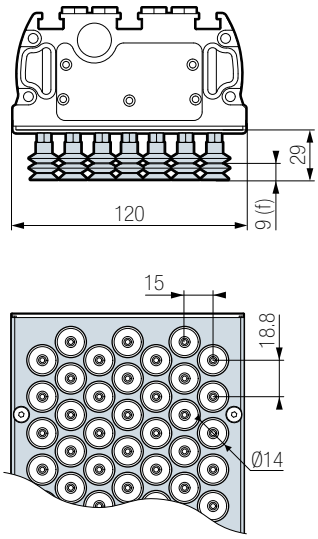

"Medium" type suction cup plate

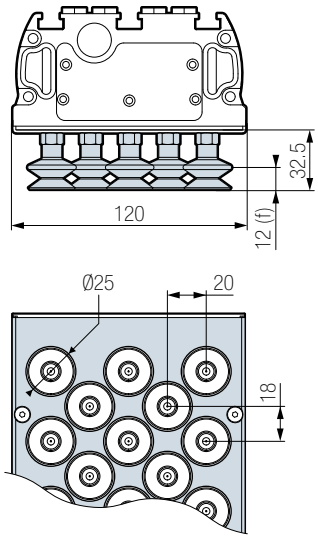

"Maxi" type suction cup plate

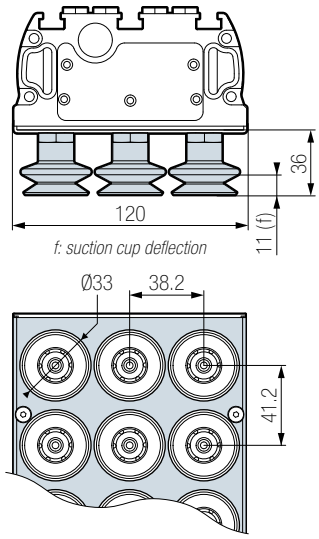

NUMBER OF SUCTION CUPS PER PLATE

	CVG 424	CVG 624	CVG 824
"Mini" type suction cup plate Ø 14 mm *(or Ø 16 mm max.)*	150	220	297
"Medium" type suction cup plate Ø 25 mm *(or Ø 18 to 25 mm)*	53	83	113
"Maxi" type suction cup plate Ø 33 mm *(or Ø 36 mm max.)*	30	42	57

GENERAL CHARACTERISTICS

- Supply: 5µ filtered, non-lubricated air relevant to ISO 8573-1 class 4 standard.
- Compressed air supply for CVG vacuum grippers with generator CMSE:
  - 1 supply for generator type E1 and E2.
  - 2 supplies for generator type E3.
  (see above drawings: G1/4"-F pressure connection).
- Optimal working pressure: 6 bar (maximum pressure 8 bar).
- Blow-off: network supply pressure.
- Protection of the valve: IP65.
- Temperature: 50 to 140°F.
- Material of the gripper: aluminium, PA6.6 15%GF, brass, stainless steel, neoprene.
- Material of the valve: PA6.6 15%GF, POM, PC 15%GF, brass, aluminium, NBR.
- Foam material: EPDM.
- Suction cup material: - "mini" type plate: silicone 30 Shore.
  - "medium" or "maxi" type plate: natural rubber 50 Shore.

According to the constraints of your application, we can personalize your vacuum gripper with any items in the COVAL standard cup range.

A wide range of shapes, diameters and materials allows us to meet all your requirements.

COVAL
vacuum managers

CMS Series Multi-Stage

Advantages of CMS Series

- Optional control valve for vacuum and release cycles.
- M12 Connector.

Characteristics

Model	Consumption (SCFM)	Flow rate (SCFM)	Max vacuum (%)	Weight (Kg)	Pression d'alimentation (Bar)	Supply pressure (bar)	Sound level (dBA)
CMS90X50...	6.90	39.08	85	1	5-7	6	65
CMS90X100...	13.82	63.57	85	1	5-7	6	65

Performance Curves

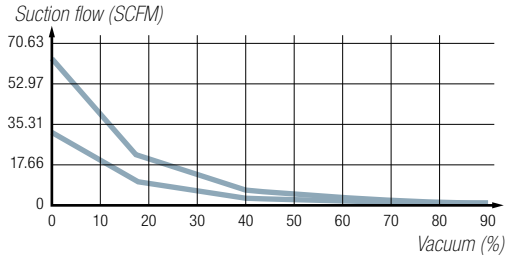

Material

- Base body: PA 6 glass fiber loaded.
- Valve body: PA 6 glass fiber loaded.
- Silencer: aluminium with felt inner element.
- Screws: galvanized steel.
- Internal components: brass, aluminium.
- Seals: NBR.
- Membrane: NBR.

Control versions

■ **Option R**
NC vacuum control, without blow-off:
CMS90X_ _**R**V_
- 1 control signal.
- NC vacuum control valve.

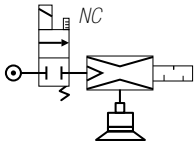

■ **Option V**
NO vacuum control, without blow-off:
CMS90X_ _**V**V_
- 1 control signal.
- NO vacuum control valve.

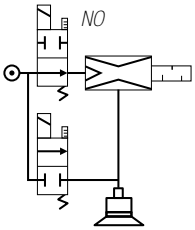

■ **Option S**
NC vacuum control, with controlled blow-off:
CMS90X_ _**S**V_
- 2 control signals.
- NC vacuum control valve.
- Blow-off controlled by external signal (NC control valve).

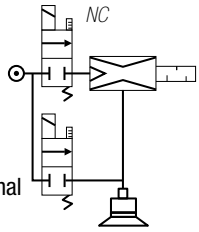

■ **ELECTRICAL M12 CONNECTIONS**

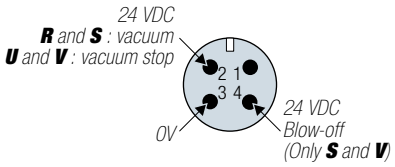

■ **ELECTRICAL CONTROL**
- Control voltage: 24 VDC (regulated) +/- 10 %.
- Current draw: 30 mA (0,7 W) vacuum or blow-off.
- Maximum usage frequency: 2Hz.
- Number of operations: 10 million cycles.

Option
CMS90X__VF
Vacuum gauge with needle

- Damping: by silicone movement (patented).
- Measuring: Bourdon tube in CuSn.
- Precision: +/- 2.5% of max. scale value.
- Frame: black ABS

*With its multi-stage ejectors, **CMS** series, **COVAL** proposes an adapted response to all applications which need high suction flow; like emptying of high volume tanks or handling of porous objects.*

*Thanks to their characteristics, the **CMS** multi-stage vacuum generators are perfectly appropriate to feed the vacuum grippers from distance.*

Vacuum Pump

To order:

CMS	90	X	100		R		V	F

VACUUM LEVEL

90 %	**90**

FLOW RATE

50	31.78 SCFM
100	63.57 SCFM

CONTROL

N	without control
R	NC vacuum control
S	NC vacuum control & NC blow-off control
V	NO vacuum control & NC blow-off control

VACUUM GAUGE

V0	without
VF	Vacuum gauge

EXAMPLE:

CMS90X 100 R VF

(Multi-stage vacuum pump, 90% max. vacuum, flow rate 1800 Nl/mn, with NC vacuum control valve and vacuum gauge with needle).

Dimensions

■ **CMS WITHOUT CONTROL VALVE:**
CMS90X_ _**N** V_

■ **CMS WITH CONTROL VALVE:**
CMS90X_ _**R** V_ CMS90X_ _**S** V_
CMS90X_ _**V** V_

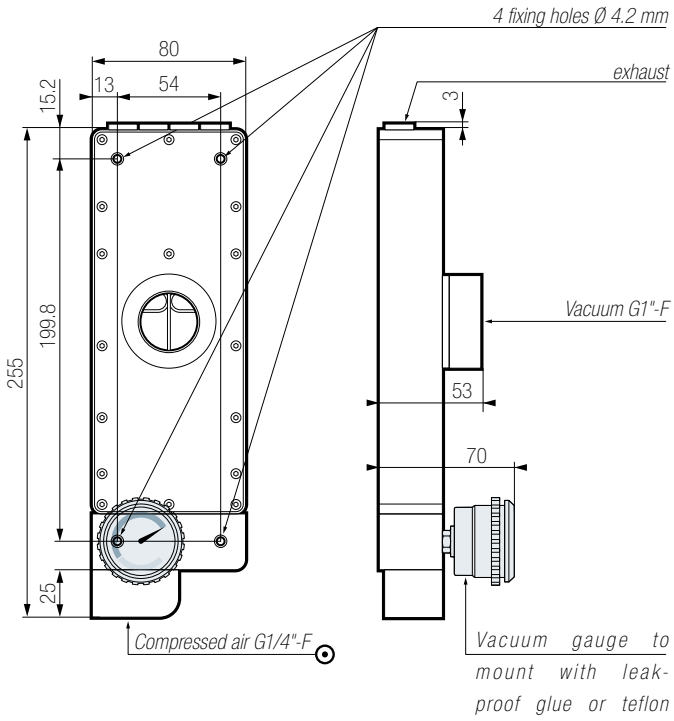

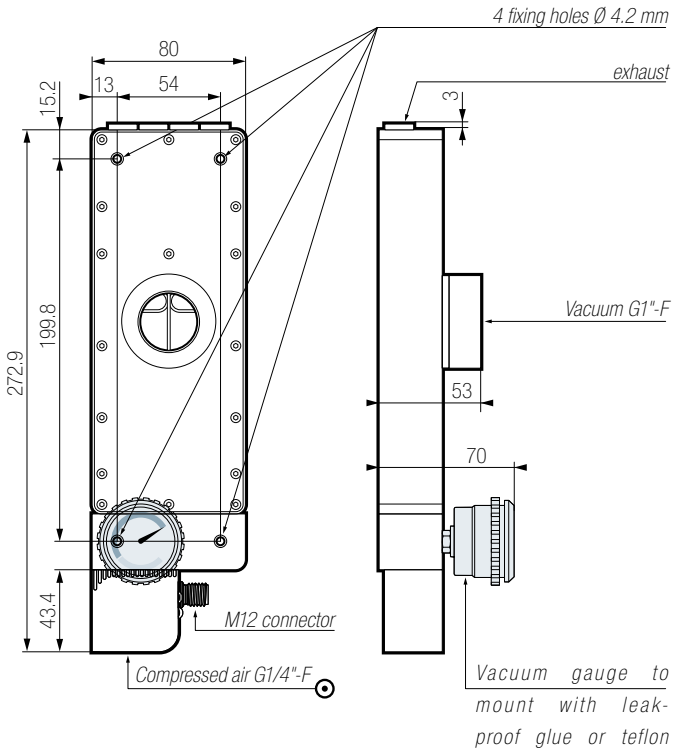

COVAL
vacuum managers

COVAL
vacuum managers

vacuum
components

A TECHNOLOGICAL PARTNER ON A GLOBAL SCALE

Located in the southeast region of France, COVAL conceives, manufactures and globally distributes high performance, advanced vacuum automation components and systems for industrial applications in all branches.

COVAL is an ISO 9001: V2015 certified company which offers innovative solutions integrating reliable and optimized components with intelligent functionalities. The focus is to provide the most personalized and economic solution to a given application while assuring a significant improvement in the productivity and the safety for the vacuum users around the world.

COVAL has an ambition for technical excellence and innovation. As a specialist in vacuum automation, COVAL is reputed for offering reliable, personalized, cost effective and productive solutions.

The references of COVAL can be found in several industrial sectors (Packaging, Automotive Industry, Plastic, Graphic, Aeronautic…) where vacuum handling is important for high efficiency and productivity.

COVAL markets its products and services all over Europe, in the United States and South America through its subsidiaries and authorized distribution network. COVAL strives to provide customer driven solutions and gives the best possible treatment to satisfy all its clients.

For all enquiries from Australia, Africa and Asia kindly contact COVAL head office in France.

Distributed by:

LLOYD'S REGISTER · LRQA
ISO 9001
certified quality management system

COVAL VACUUM TECHNOLOGY INC.
901-102 Jones Franklin Rd.
Raleigh, NC 27606
Phone : (919) 233-4855
Fax : (919) 233-4854

www.coval-inc.com

© COVAL – 10/2016 – Illustrations KeyDx – The diagrams are not contractual. The range and the products characteristics may be modified by COVAL without notice.